Z2
Connectivity Guide

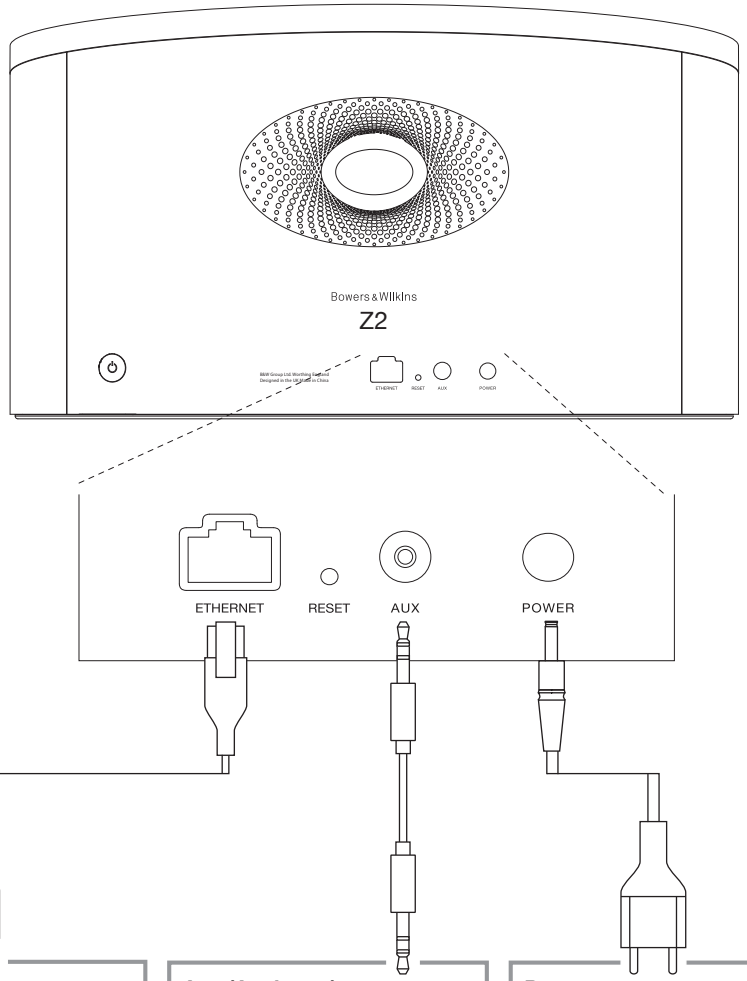

Ethernet
Use an Ethernet cable for:

Wired network connectivity and AirPlay streaming

Aux (Analogue)
Use either a 3.5mm to 3.5mm stereo cable or a 3.5mm to 2 x RCA cable to connect your:

MP3 player
Smartphones
Computer
Games consoles
CD player
DVD player
DAB radio
TV

Note: Smartphones or MP players with non- standard headphone outputs may not be compatible with Z2's Aux input.

Power
Connect to power source